

DATASHEET
Single Phase Induction Motor – Capacitor Start & Run
VEL1ML90L_4_1,5B5

GENERAL INFORMATION

Item	Specification
Rated Power	1.5 kW
Poles	4
Speed	1400 rpm
Voltage	220 V
Frequency	50 Hz
Current	10.5 A
cos φ	0.93
Efficiency	75%
Frame	90L
Mounting	IM B5
Protection	IP54

ELECTRICAL DATA (REAL TEST DATA)

V	Load %	Current (A)	Speed (rpm)	Output (W)	cos φ	Efficiency (%)	Hz
220	50	6.3	1450	750	0.87	72	50
220	75	8.5	1430	1125	0.91	75	50
220	100	10.5	1400	1500	0.93	78	50

CAPACITOR DATA

Item	Value
Run Capacitor	30 µF
Start Capacitor	150 µF
Voltage	450 V

VEL Motor reserves the right to change specifications without prior notice.

sales@velmotor.com.tr



MECHANICAL DRAWING – IM B5

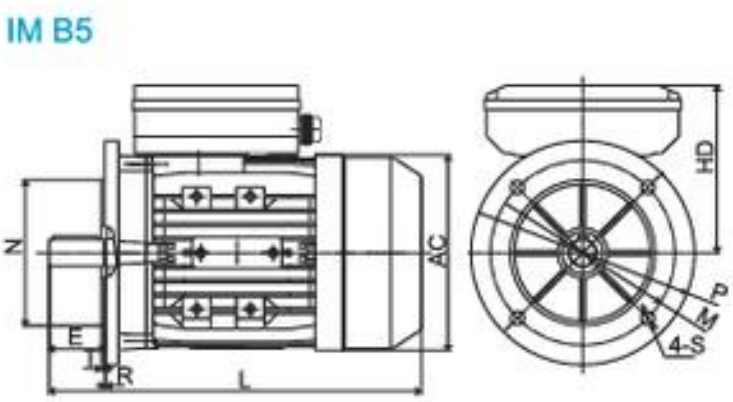

MECHANICAL DIMENSIONS (IEC 60072-1)

Dimension	mm
H	90
D	24
E	50
F	8
G	20
M	165
N	130
P	200
R	0
S	Ø12
T	3.5
L	380

VEL Motor reserves the right to change specifications without prior notice.

sales@velmotor.com.tr