

DATASHEET
Single Phase Induction Motor – Capacitor Start & Run
VEL1ML90L_2_2,2B14

GENERAL INFORMATION

Item	Specification
Rated Power	2.2 kW
Poles	2
Speed	2800 rpm
Voltage	220 V
Frequency	50 Hz
Current	14.5 A
cos φ	0.95
Efficiency	78%
Frame	90L
Mounting	IM B14
Protection	IP54

ELECTRICAL DATA (REAL TEST DATA)

V	Load %	Current (A)	Speed (rpm)	Output (W)	cos φ	Efficiency (%)	Hz
220	50	9.2	2850	1100	0.88	72	50
220	75	12.1	2830	1650	0.92	76	50
220	100	14.5	2800	2200	0.95	78	50

CAPACITOR DATA

Item	Value
Run Capacitor	40 µF
Start Capacitor	150 µF
Voltage	450 V

VEL Motor reserves the right to change specifications without prior notice.

sales@velmotor.com.tr



MECHANICAL DRAWING – IM B14

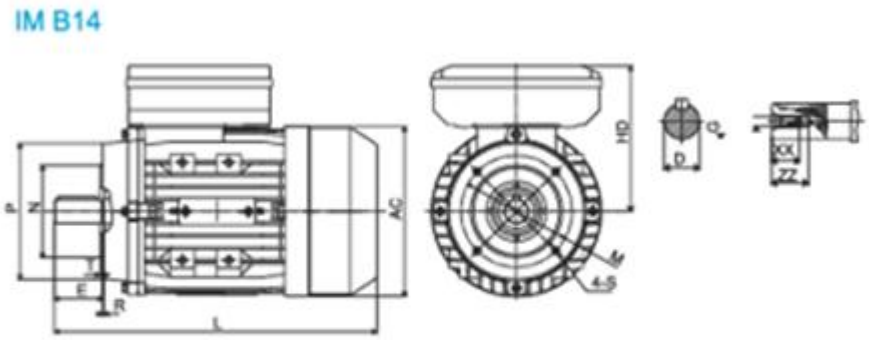

MECHANICAL DIMENSIONS (IEC 60072-1)

Dimension	mm
H	90
D	24
E	50
F	8
G	20
M	115
N	95
P	140
R	0
S	Ø9
T	3.5
L	380

VEL Motor reserves the right to change specifications without prior notice.

sales@velmotor.com.tr