

DATASHEET
Single Phase Induction Motor – Capacitor Start & Run
VEL1ML80_4-0,75B14

GENERAL INFORMATION

Item	Specification
Rated Power	0,75 kW
Poles	4
Speed	1400 rpm
Voltage	220 V
Frequency	50 Hz
Current	5.5 A
cos φ	0.90
Efficiency	68%
Frame	80
Mounting	IM B14
Protection	IP54

ELECTRICAL DATA (REAL TEST DATA)

V	Load %	Current (A)	Speed (rpm)	Output (W)	cos φ	Efficiency (%)	Hz
220	50	3.3	1450	375	0.85	63	50
220	75	4.4	1430	560	0.88	66	50
220	100	5.5	1400	750	0.90	68	50

CAPACITOR DATA

Item	Value
Run Capacitor	20 µF
Start Capacitor	100 µF
Voltage	450 V

VEL Motor reserves the right to change specifications without prior notice.

sales@velmotor.com.tr



MECHANICAL DRAWING – IM B14

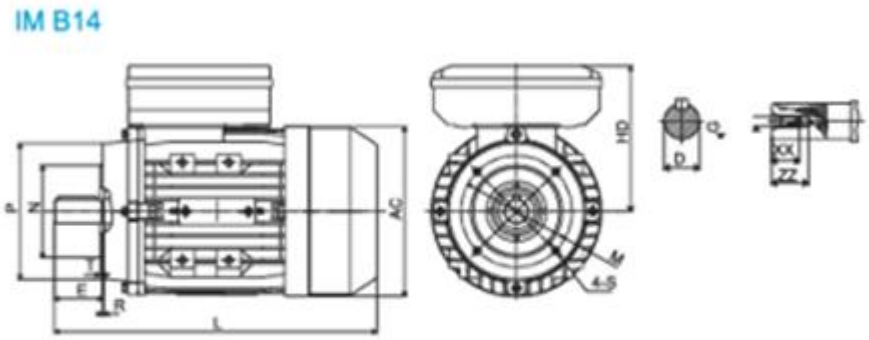

MECHANICAL DIMENSIONS (IEC 60072-1)

Dimension	mm
H	80
D	19
E	40
F	6
G	15
M	100
N	80
P	120
R	0
S	Ø9
T	3
L	300

VEL Motor reserves the right to change specifications without prior notice.

sales@velmotor.com.tr