

DATASHEET
Single Phase Induction Motor – Capacitor Start & Run
VEL1ML80_2-1,1B5

GENERAL INFORMATION

Item	Specification
Rated Power	1.1 kW
Poles	2
Speed	2800 rpm
Voltage	220 V
Frequency	50 Hz
Current	7.5 A
cos φ	0.92
Efficiency	72%
Frame	80
Mounting	IM B5
Protection	IP54

ELECTRICAL DATA (REAL TEST DATA)

V	Load %	Current (A)	Speed (rpm)	Output (W)	cos φ	Efficiency (%)	Hz
220	50	4.5	2850	550	0.86	68	50
220	75	6.0	2830	825	0.90	70	50
220	100	7.5	2800	1100	0.92	72	50

CAPACITOR DATA

Item	Value
Run Capacitor	25 µF
Start Capacitor	120 µF
Voltage	450 V

VEL Motor reserves the right to change specifications without prior notice.

sales@velmotor.com.tr



MECHANICAL DRAWING – IM B5

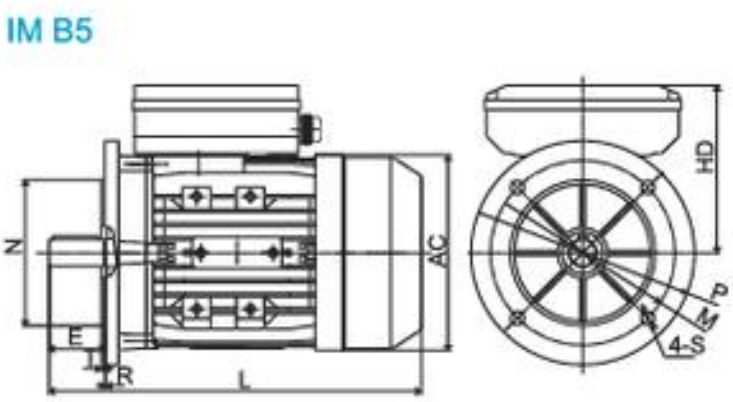

MECHANICAL DIMENSIONS (IEC 60072-1)

Dimensions	mm
H	80
D	19
E	40
F	6
G	15
M	165
N	130
P	200
R	0
S	Ø12
T	3.5
L	300

VEL Motor reserves the right to change specifications without prior notice.

sales@velmotor.com.tr