

DATASHEET
Single Phase Induction Motor – Capacitor Start & Run
VEL1ML112M_4_3,0B3

GENERAL INFORMATION

Item	Specification
Rated Power	3.0 kW
Poles	4
Speed	1450 rpm
Voltage	220 V
Frequency	50 Hz
Current	18.0 A
cos φ	0.95
Efficiency	80%
Frame	112M
Mounting	IM B3
Protection	IP54

ELECTRICAL DATA (REAL TEST DATA)

V	Load %	Current (A)	Speed (rpm)	Output (W)	cos φ	Efficiency (%)	Hz
220	50	11.5	1470	1500	0.89	74	50
220	75	15	1450	2250	0.93	77	50
220	100	18	1430	3000	0.95	80	50

CAPACITOR DATA

Item	Value
Run Capacitor	50 µF
Start Capacitor	250 µF
Voltage	450 V

VEL Motor reserves the right to change specifications without prior notice.

sales@velmotor.com.tr



MECHANICAL DRAWING – IM B3

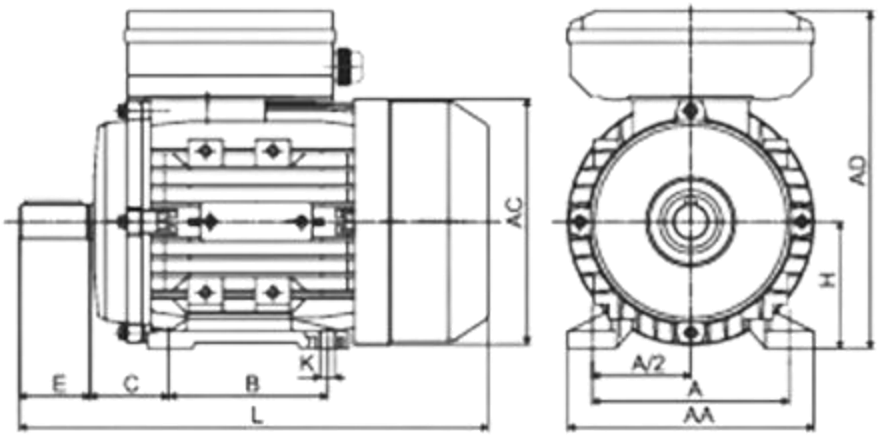

MECHANICAL DIMENSIONS (IEC 60072-1)

Dimension	mm
H	112
A	190
B	160
C	70
D	28
E	60
F	8
G	24
K	12
L	450

VEL Motor reserves the right to change specifications without prior notice.

sales@velmotor.com.tr