

DATASHEET
Single Phase Induction Motor – Capacitor Start & Run
VEL1ML112M_2_3,7B14

GENERAL INFORMATION

Item	Specification
Rated Power	3.7 kW
Poles	2
Speed	2850 rpm
Voltage	220 V
Frequency	50 Hz
Current	22.0 A
cos φ	0.96
Efficiency	82%
Frame	112M
Mounting	IM B14
Protection	IP54

ELECTRICAL DATA (REAL TEST DATA)

V	Load %	Current (A)	Speed (rpm)	Output (W)	cos φ	Efficiency (%)	Hz
220	50	14	2870	1850	0.89	77	50
220	75	18.5	2850	2775	0.93	80	50
220	100	22	2830	3700	0.96	82	50

CAPACITOR DATA

Item	Value
Run Capacitor	60 µF
Start Capacitor	250 µF
Voltage	450 V

VEL Motor reserves the right to change specifications without prior notice.

sales@velmotor.com.tr



MECHANICAL DRAWING – IM B14

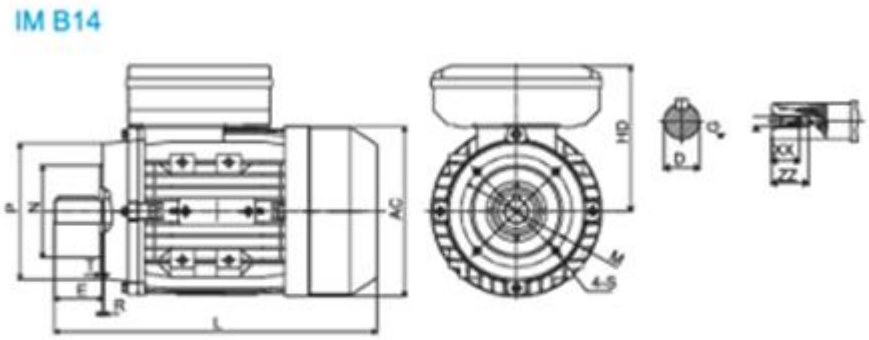

MECHANICAL DIMENSIONS (IEC 60072-1)

Dimension	mm
H	112
D	28
E	60
F	8
G	24
M	130
N	110
P	160
R	0
S	Ø11
T	4
L	450

VEL Motor reserves the right to change specifications without prior notice.

sales@velmotor.com.tr