

DATASHEET
Single Phase Induction Motor – Capacitor Start & Run
VEL1ML100L_2_3,0B3

GENERAL INFORMATION

Item	Specification
Rated Power	3.0 kW
Poles	2
Speed	2850 rpm
Voltage	220 V
Frequency	50 Hz
Current	18.5 A
cos φ	0.95
Efficiency	80%
Frame	100L
Mounting	IM B3
Protection	IP54

ELECTRICAL DATA (REAL TEST DATA)

V	Load %	Current (A)	Speed (rpm)	Output (W)	cos φ	Efficiency (%)	Hz
220	50	11.5	2870	1500	0.88	75	50
220	75	15.0	2850	2250	0.92	78	50
220	100	18.5	2830	3000	0.95	80	50

CAPACITOR DATA

Item	Value
Run Capacitor	50 µF
Start Capacitor	200 µF
Voltage	450 V

VEL Motor reserves the right to change specifications without prior notice.

sales@velmotor.com.tr



MECHANICAL DRAWING – IM B3

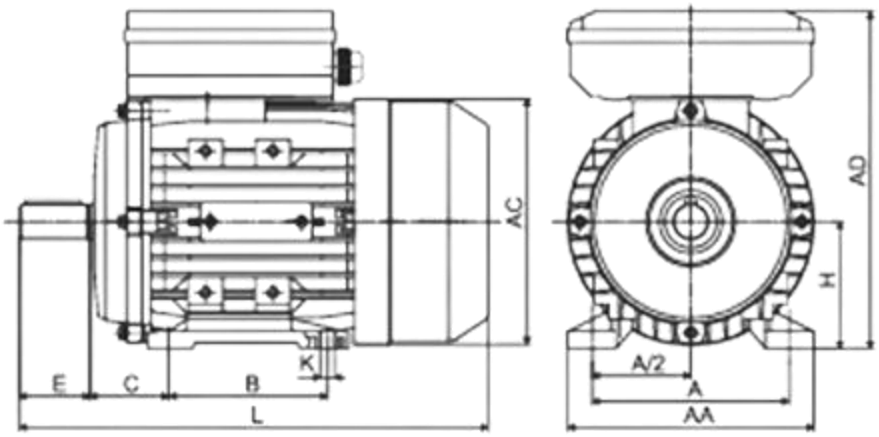

MECHANICAL DIMENSIONS (IEC 60072-1)

Dimension	mm
H	100
A	160
B	140
C	63
D	28
E	60
F	8
G	24
K	12
L	420

VEL Motor reserves the right to change specifications without prior notice.

sales@velmotor.com.tr