

# DATASHEET
# Single Phase Induction Motor – Capacitor Start & Run
# VEL1ML100L_2_3,0B14

## GENERAL INFORMATION

| Item | Specification |
|---|---|
| Rated Power | 3.0 kW |
| Poles | 2 |
| Speed | 2850 rpm |
| Voltage | 220 V |
| Frequency | 50 Hz |
| Current | 18.5 A |
| cos φ | 0.95 |
| Efficiency | 80% |
| Frame | 100L |
| Mounting | IM B14 |
| Protection | IP54 |

## ELECTRICAL DATA (REAL TEST DATA)

| V | Load % | Current (A) | Speed (rpm) | Output (W) | cos φ | Efficiency (%) | Hz |
|---|---|---|---|---|---|---|---|
| 220 | 50 | 11.5 | 2870 | 1500 | 0.88 | 75 | 50 |
| 220 | 75 | 15.0 | 2850 | 2250 | 0.92 | 78 | 50 |
| 220 | 100 | 18.5 | 2830 | 3000 | 0.95 | 80 | 50 |

## CAPACITOR DATA

| Item | Value |
|---|---|
| Run Capacitor | 50 µF |
| Start Capacitor | 200 µF |
| Voltage | 450 V |

VEL Motor reserves the right to change specifications without prior notice.

sales@velmotor.com.tr



## MECHANICAL DRAWING – IM B14

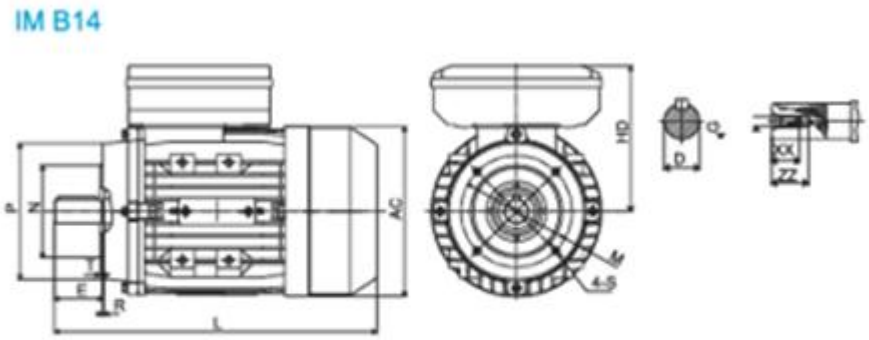


## MECHANICAL DIMENSIONS (IEC 60072-1)

| Dimension | mm |
|---|---|
| H | 100 |
| D | 28 |
| E | 60 |
| F | 8 |
| G | 24 |
| M | 130 |
| N | 110 |
| P | 160 |
| R | 0 |
| S | Ø11 |
| T | 4 |
| L | 420 |

VEL Motor reserves the right to change specifications without prior notice.

sales@velmotor.com.tr